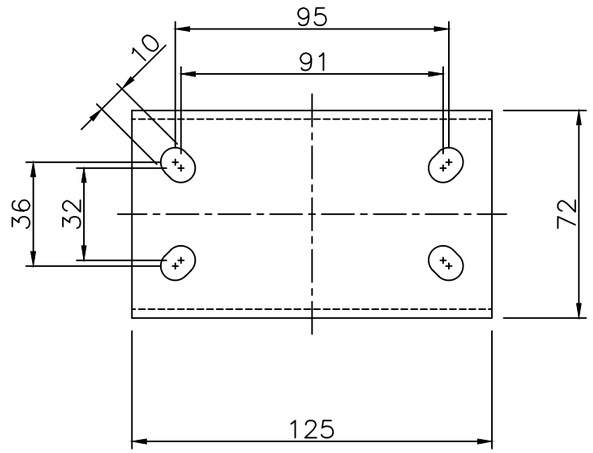

125mm R3 – 3T Bending WHEEL ASS'Y

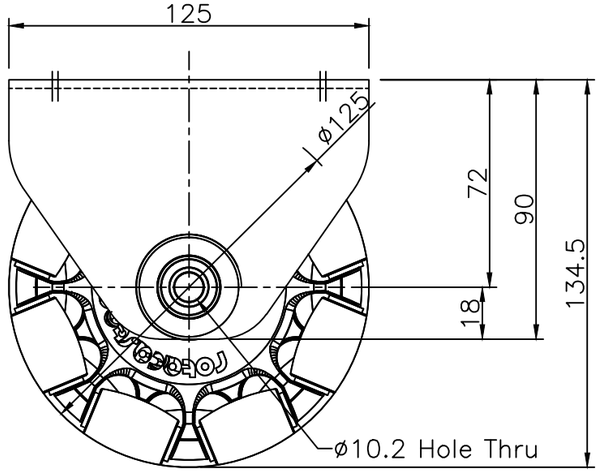

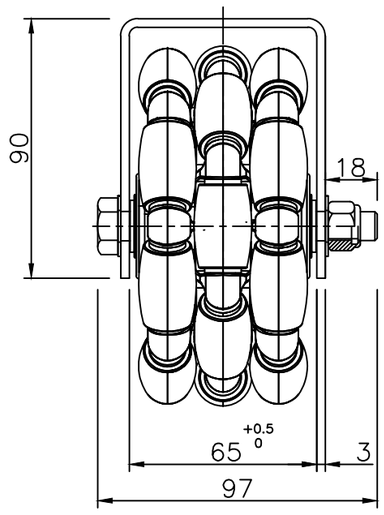

CLASS OF FINISH		GENERAL TOL.(MACHINE)		
~	–	NOMINAL DIM.(MM)		TOL.
▽	50 S	OVER 0.5	UNDER 6	±0.1
▽▽	12.5 S	6	30	±0.2
▽▽▽	3.2 S	30	120	±0.3
▽▽▽▽	0.8 S	120	315	±0.5
		315	1000	±0.8
		1000	2000	±1.2
		OVER 2000		±1.5

NO	DESCRIPTION	MATERIAL	Q'TY	SIZE	REMARKS
	Bracket – 125R3	SUS304	3	3T	–

DESIGNED	CHECKED	APPROVED

TITLE: 125mm R3 Bending Bracket Ass'y

(주) 비앤피

UNIT		SCALE		REF. NO		DWG. NO	

NO	DETAILS OF THE MODIFICATION	REASONS OF THE MODIFICATION	DESIGNED
△			
△			